7, Autogennaya Str., Kharkov, 61099, Ukraine. Phone: (+38-057) 728-1244, 728-1241. Fax: (+38-057) 728-1243, (+38-0572) 946-830
E-mail: market@yuzhcable.com.ua

КМПвВЭВнгд-FR 4x0.5
ТУ У 27.3-00214534-084:2016

Fire resistant compact cables with copper conductors, XLPE-insulated, sheathed with low risk-of-fire PVC composition, with collective screen, with protective covering made of low risk-of-fire PVC composition

For the cable of this mark correspond the foreign-made analogues:
КМПвВЭВнг-FRLS (RU)
Used:
• *for the installation of control circuits, alarm system, communications, interinstrument connections operating at AC voltage of 500 V or 1000 V with frequency no more than 200 kHz, or at a constant voltage of 750 V or 1000 V, respectively*
• *for multi-cable installation (acc. GOST 31565:2012) in cable channels and premises of internal electrical installations, including nuclear power stations (NPS) outside the under containment zone*
• *for use in systems having security class 2 (A), 3 (B), 3 (C), and 4 according to the classification of НП 306.2.141-2008 and НП 306.2.202-2015*
• *for cable lines of nuclear power stations security systems equipment, electrical wiring circuits of fire safety systems (fire alarm circuits, power supply of fire fighting pumps, lighting of emergency exits and escape routes, smoke removal and ventilation systems, evacuation elevators)*
• *for wirings for the operating departments of hospitals, emergency electric power supply circuits for equipment (current collectors), which operates in case of fire*

Fire safety code in accordance with ДСТУ 4809:2007: ПБ123121080
Products of this mark meet the requirements:
• *single wire cable flame retardance*
• *bunched cable flame retardance category A*
• *toxicity class Tk3 of the combustion products of nonmetallic elements (toxicity index over 120 g/m^3)*
• *class ДТк1 on smoke-forming ability by smouldering of non-metallic elements (coefficient of smoke formation from 50 to 500 m^2/kg)*
• *class ДПк2 on smoke-forming ability by combustion (minimum luminous flux more than 60 %)*
• *corrosive class Кк1 of combustion products of non-metallic elements (the number of halogen hydrides less than 150 mg/g, pH less than 4.3, specific conductivity more than 10 µS/mm)*
• *flame-resistant class FE180 under fire conditions with a temperature not less than 750 °C*

© 2024 PJSC Yuzhcable Works. © 2024 A. Kevorkyan

451202-004010000050

7, Autogennaya Str., Kharkov, 61099, Ukraine. Phone: (+38-057) 728-1244, 728-1241. Fax: (+38-057) 728-1243, (+38-0572) 946-830
E-mail: market@yuzhcable.com.ua

КМПвВЭВнгд-FR 4x0.5
ТУ У 27.3-00214534-084:2016

Fire resistant compact cables with copper conductors, XLPE-insulated, sheathed with low risk-of-fire PVC composition, with collective screen, with protective covering made of low risk-of-fire PVC composition

TECHNICAL SPECIFICATIONS

Rated AC voltage of no more than 200 kHz	V	500; 1000
Rated DC voltage	V	750; 1000
Number and rated diameter of conductors	mm^2	4 x 0.5
Operating temperature range	°C	-50 ... +60
Permissible continious conductors temperature	°C	+90
Minimum bending radius by laying	mm	89
Cable outer diameter (for reference only) **	mm	14.8
Cable weight (approximate)	kg/km	312

Notes:

When ordering it is neccesary to agree the factory length of the product with the manufacturer

*** The external diameter may differ from the rated up to ± 10 %*

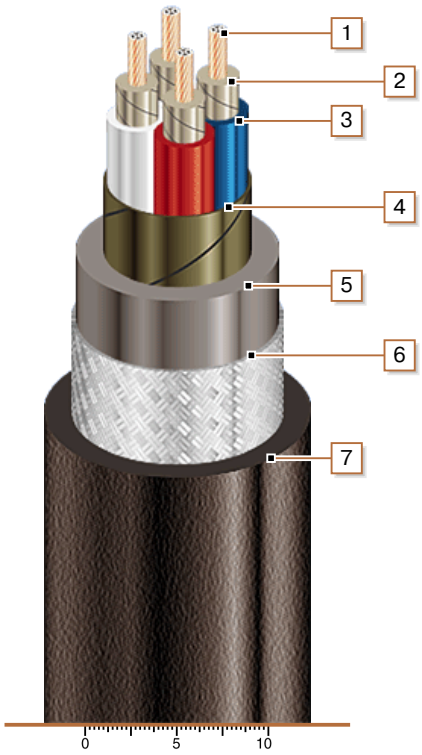

CONSTRUCTION

1. *Copper multiwire conductor*
2. *Fire-resistant barrier*
3. *XLPE insulation*
4. *Wrapping the core with glass tape or mica glass tape*
5. *Low fire-risk PVC-compound inner sheath*
6. *Collective screen - tinned copper or copper wires braid*
7. *Outer sheath of low risk-of-fire polyvinylchloride (PVC) composition*

© 2024 PJSC Yuzhcable Works. © 2024 A. Kevorkyan