7, Autogennaya Str., Kharkov, 61099, Ukraine. Phone: (+38-057) 728-1244, 728-1241. Fax: (+38-057) 728-1243, (+38-0572) 946-830
E-mail: market@yuzhcable.com.ua

451201-027010000050

КМПвВЭВнгд 27х0.5
ТУ У 27.3-00214534-084:2016

Compact cables with copper conductors, XLPE-insulated, sheathed with low risk-of-fire PVC composition, with collective screen, with protective covering made of low risk-of-fire PVC composition

For the cable of this mark correspond the foreign-made analogues:
КМПвВЭВнг-LS (RU)
Used:
• *for the installation of control circuits, alarm system, communications, interinstrument connections operating at AC voltage of 500 V or 1000 V with frequency no more than 200 kHz, or at a constant voltage of 750 V or 1000 V, respectively*
• *for multi-cable installation (acc. GOST 31565:2012) in cable channels and premises of internal electrical installations, including nuclear power stations (NPS) outside the under containment zone*
• *for use in systems having security class 3 (B), 3 (C) and 4 according to the classification of НП 306.2.141-2008 and НП 306.2.202-2015*

Fire safety code in accordance with ДСТУ 4809:2007: ПБ123121000
Products of this mark meet the requirements:
• *single wire cable flame retardance*
• *bunched cable flame retardance category A*
• *toxicity class Тк3 of the combustion products of nonmetallic elements (toxicity index over 120 g/m^3)*
• *class ДТк1 on smoke-forming ability by smouldering of non-metallic elements (coefficient of smoke formation from 50 to 500 m^2/kg)*
• *class ДПк2 on smoke-forming ability by combustion (minimum luminous flux more than 60 %)*
• *corrosive class Кк1 of combustion products of non-metallic elements (the number of halogen hydrides less than 150 mg/g, pH less than 4.3, specific conductivity more than 10 µS/mm)*

© 2024 PJSC Yuzhcable Works. © 2024 A. Kevorkyan

451201-027010000050

7, Autogennaya Str., Kharkov, 61099, Ukraine. Phone: (+38-057) 728-1244, 728-1241. Fax: (+38-057) 728-1243, (+38-0572) 946-830
E-mail: market@yuzhcable.com.ua

КМПвВЭВнгд 27х0.5
ТУ У 27.3-00214534-084:2016

Compact cables with copper conductors, XLPE-insulated, sheathed with low risk-of-fire PVC composition, with collective screen, with protective covering made of low risk-of-fire PVC composition

TECHNICAL SPECIFICATIONS

Rated AC voltage of no more than 200 kHz	V	500; 1000
Rated DC voltage	V	750; 1000
Number and rated diameter of conductors	mm^2	27 x 0.5
Operating temperature range	˚C	-50 ... +60
Permissible continious conductors temperature	˚C	+90
Minimum bending radius by laying	mm	116
Cable outer diameter (for reference only) **	mm	19.2
Cable weight (approximate)	kg/km	548

Notes:

When ordering it is neccesary to agree the factory length of the product with the manufacturer

*** The external diameter may differ from the rated up to ± 10 %*

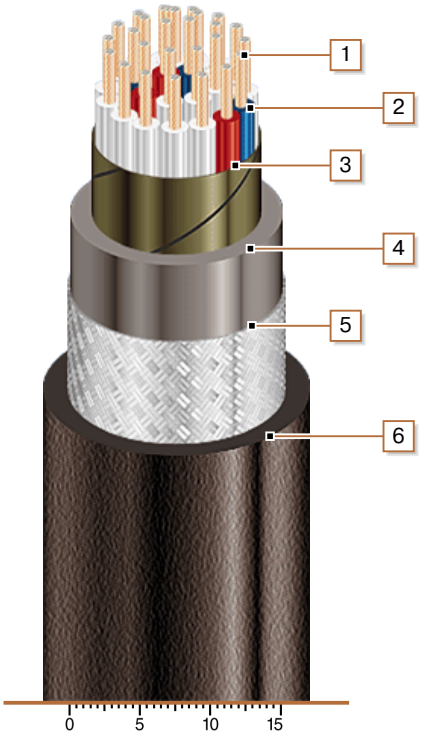

CONSTRUCTION

1. *Copper multiwire conductor*
2. *XLPE insulation*
3. *Wrapping the core with glass tape or mica glass tape*
4. *Low fire-risk PVC-compound inner sheath*
5. *Collective screen - tinned copper or copper wires braid*
6. *Outer sheath of low risk-of-fire polyvinylchloride (PVC) composition*

© 2024 PJSC Yuzhcable Works. © 2024 A. Kevorkyan