180802-150040100000

7, Autogennaya Str., Kharkov, 61099, Ukraine. Phone: (+38-057) 728-1244, 728-1241. Fax: (+38-057) 728-1243, (+38-0572) 946-830
E-mail: market@yuzhcable.com.ua

NAYY-O 5x4 RE-0.6/1
DIN VDE 0276-603

Power cables with aluminium conductors, with PVC-compound insulation, with PVC-compound outer sheath

Cables are used for laying:
- *single laying*
- *in premises, dry ducts and tunnels, in corrosive environment*

Fire safety code in accordance with ДСТУ 4809:2007: ПБ100000000
Products of this mark meet the requirements:
- *single wire cable flame retardance*

TECHNICAL SPECIFICATIONS

Rated voltage	kV	1
Number and rated area of conductors	mm^2	5 x 4
Phase insulation thikness	mm	1
Permissible continious current rating (AC of industrial frequency) *		
• *by aerial laying*	A	26
• *by burial*	A	34
Maximum permissible conductor temperature		
• *Continious*	˚C	+70
• *in emergency operation*	˚C	+90
• *at short circuit*	˚C	+160
Operating temperature range	˚C	-50 … +50
Minimum bending radius by laying	mm	134.25
Rated outer diameter of the cable (for reference) **	mm	17.9
Cable weight (approximate)	kg/km	530
Rated factory cable length and gross weight of the delivery on the drums	m, t	# 12: 1130 • 0.7

Notes:

When ordering it is neccesary to agree the factory length of the product with the manufacturer

** Long permissible current loads are calculated for the following conditions: air temperature plus 25 ˚C, soil temperature plus 15 ˚C, thermal resistivity of soil 1.2 ˚K•m/W, laying depth in the soil 0.7 m*

*** The external diameter may differ from the rated up to ± 10 %*

© 2024 PJSC Yuzhcable Works. © 2024 A. Kevorkyan

7, Autogennaya Str., Kharkov, 61099, Ukraine. Phone: (+38-057) 728-1244, 728-1241. Fax: (+38-057) 728-1243, (+38-0572) 946-830
E-mail: market@yuzhcable.com.ua

NAYY-O 5x4 RE-0.6/1
DIN VDE 0276-603

Power cables with aluminium conductors, with PVC-compound insulation, with PVC-compound outer sheath

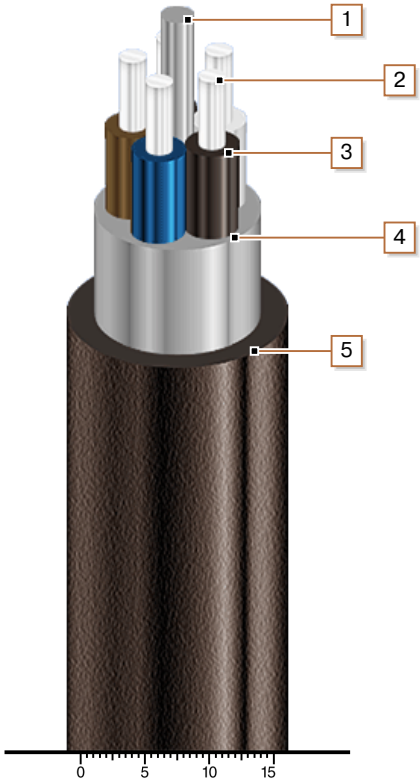

CONSTRUCTION

1. *Filling harness*
2. *Aluminium conductor*
3. *PVC compound insulation*
4. *PVC compound inner sheath*
5. *PVC compound outer sheath*

© 2024 PJSC Yuzhcable Works. © 2024 A. Kevorkyan