180410-140100100000

7, Autogennaya Str., Kharkov, 61099, Ukraine. Phone: (+38-057) 728-1244, 728-1241. Fax: (+38-057) 728-1243, (+38-0572) 946-830
E-mail: market@yuzhcable.com.ua

# АВКВнг 4х10 (ож)-1
# ТУ У 31.3-00214534-016-2003

Power cables with aluminium conductors, with PVC-compound insulation, galvanized steel-wire armoured, with low-flammable PVC-compound outer sheath

Cables are used for laying:
- *in bunches*
- *in premises, dry ducts and tunnels, in corrosive environment*
- *in places, where intense tensile forces are possible (in cable lifting, in bulk, heaving, boggy, everfrost soils)*

Manufacturing of cables with a different number and different design of conductors is possible
Manufacturing of single-phase cables with aluminium-wire armour is possible

Fire safety code in accordance with ДСТУ 4809:2007: ПБ130000000
Products of this mark meet the requirements:
- *single wire cable flame retardance*
- *bunched cable flame retardance category B*

## TECHNICAL SPECIFICATIONS

| | | |
|---|---|---|
| Rated voltage | kV | 1 |
| Number and rated area of conductors | $mm^2$ | 4 x 10 |
| Phase insulation thikness | mm | 1 |
| Armor wire diameter | mm | 1.4 |
| Permissible continious current rating (AC of industrial frequency) * | | |
| • *by aerial laying* | A | 46 |
| • *by burial* | A | 54 |
| Maximum permissible conductor temperature | | |
| • *Continious* | ˚C | +70 |
| • *at short circuit* | ˚C | +160 |
| Operating temperature range | ˚C | -50 … +50 |
| Minimum bending radius by laying | mm | 184 |
| Rated outer diameter of the cable (for reference) ** | mm | 23 |
| Cable weight (approximate) | kg/km | 990 |
| Rated factory cable length and gross weight of the delivery on the drums | m, t | # 14: 1090 • 1.3 |

*Notes:*

*When ordering it is neccesary to agree the factory length of the product with the manufacturer*

** Long permissible current loads are calculated during operation in four-wire networks with load in all the conductors for the following conditions: air temperature plus 25 ˚C, soil temperature plus 15 ˚C, thermal resistivity of soil 1.2 ˚K•m/W, laying depth in the soil 0.7 m*

*** The external diameter may differ from the rated up to ± 10 %*

© 2024 PJSC Yuzhcable Works. © 2024 A. Kevorkyan

7, Autogennaya Str., Kharkov, 61099, Ukraine. Phone: (+38-057) 728-1244, 728-1241. Fax: (+38-057) 728-1243, (+38-0572) 946-830
E-mail: market@yuzhcable.com.ua

# АВКВнг 4х10 (ож)-1
# ТУ У 31.3-00214534-016-2003

Power cables with aluminium conductors, with PVC-compound insulation, galvanized steel-wire armoured, with low-flammable PVC-compound outer sheath

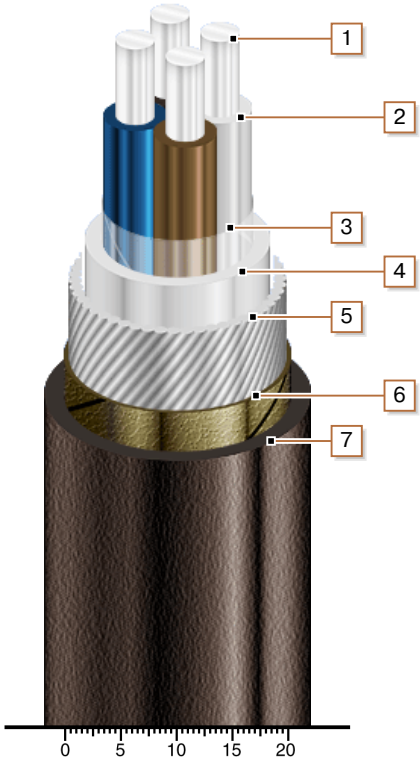


## CONSTRUCTION

1. *Aluminium conductor*
2. *PVC compound insulation*
3. *PET film winding*
4. *PVC compound belt insulation*
5. *Round galvanized steel-wire armour*
6. *Lapping layer of nonwoven cloth tape*
7. *Low flammable PVC compound outer sheath*

*Note: conductor twisting is not illustrated*

© 2024 PJSC Yuzhcable Works. © 2024 A. Kevorkyan