YUZHCABLE
PRODUCTION GUIDE

180401-141500200000

7, Autogennaya Str., Kharkov, 61099, Ukraine. Phone: (+38-057) 728-1244, 728-1241. Fax: (+38-057) 728-1243, (+38-0572) 946-830
E-mail: market@yuzhcable.com.ua

ВКВ 4х150-1
ТУ У 31.3-00214534-016-2003

Power cables with copper conductors, with PVC-compound insulation, galvanized steel-wire armoured, with PVC-compound outer sheath

Cables are used for laying:
- *single laying*
- *in premises, dry ducts and tunnels, in corrosive environment*
- *in places, where intense tensile forces are possible (in cable lifting, in bulk, heaving, boggy, everfrost soils)*

Manufacturing of cables with a different number and different design of conductors is possible
Manufacturing of single-phase cables with aluminium-wire armour is possible

Fire safety code in accordance with ДСТУ 4809:2007: ПБ100000000
Products of this mark meet the requirements:
- *single wire cable flame retardance*

TECHNICAL SPECIFICATIONS

Rated voltage	kV	1
Number and rated area of conductors	mm^2	4 x 150
Phase insulation thikness	mm	1.8
Armor wire diameter	mm	2.8
Permissible continious current rating (AC of industrial frequency) *		
• *by aerial laying*	A	321
• *by burial*	A	332
Maximum permissible conductor temperature		
• *Continious*	˚C	+70
• *at short circuit*	˚C	+160
Operating temperature range	˚C	-50 ... +50
Minimum bending radius by laying	mm	448
Rated outer diameter of the cable (for reference) **	mm	56
Cable weight (approximate)	kg/km	9560
Rated factory cable length and gross weight of the delivery on the drums	m, t	# 18: 370 • 4.0 # 20: 590 • 6.3

Notes:

When ordering it is neccesary to agree the factory length of the product with the manufacturer

** Long permissible current loads are calculated during operation in four-wire networks with load in all the conductors for the following conditions: air temperature plus 25 ˚C, soil temperature plus 15 ˚C, thermal resistivity of soil 1.2 ˚K•m/W, laying depth in the soil 0.7 m*

*** The external diameter may differ from the rated up to ± 10 %*

© 2024 PJSC Yuzhcable Works. © 2024 A. Kevorkyan

7, Autogennaya Str., Kharkov, 61099, Ukraine. Phone: (+38-057) 728-1244, 728-1241. Fax: (+38-057) 728-1243, (+38-0572) 946-830
E-mail: market@yuzhcable.com.ua

180401-141500200000

ВКВ 4х150-1
ТУ У 31.3-00214534-016-2003

Power cables with copper conductors, with PVC-compound insulation, galvanized steel-wire armoured, with PVC-compound outer sheath

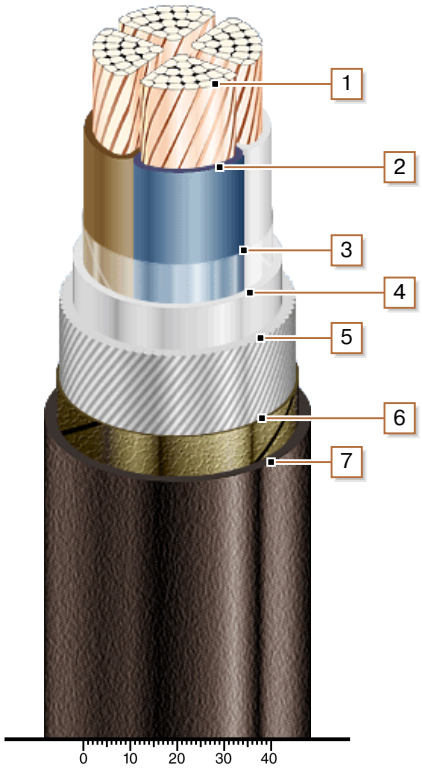

CONSTRUCTION

1. *Copper multiwire compact conductor*
2. *PVC compound insulation*
3. *PET film winding*
4. *PVC compound belt insulation*
5. *Round galvanized steel-wire armour*
6. *Lapping layer of nonwoven cloth tape*
7. *PVC compound outer sheath*

Note: conductor twisting is not illustrated

© 2024 PJSC Yuzhcable Works. © 2024 A. Kevorkyan