180123-130700110350

7, Autogennaya Str., Kharkov, 61099, Ukraine. Phone: (+38-057) 728-1244, 728-1241. Fax: (+38-057) 728-1243, (+38-0572) 946-830
E-mail: market@yuzhcable.com.ua

АПвБбШв 3х70+1х35 (ож)-1
ГОСТ 16442-80,ТУ У 31.3-00214534-048:2007

Power cables with aluminium conductors, XLPE-insulated, galvanized steel-tape armoured, with PVC-compound protection hose

Cables are used for laying:
- *single laying*
- *in premises, dry ducts and tunnels, in corrosive environment*
- *in places, where small mechanical impacts on cable are possible, including tensile forces*

Manufacturing of cable with multiwire conductors (main and additional one) is possible
Manufacturing of non-galvanized armoured cable, covered with a layer of bitumen and PET film is possible
Manufacturing of cable with PVC compound belt insulation is possible

Fire safety code in accordance with ДСТУ 4809:2007: ПБ100000000
Products of this mark meet the requirements:
- *single wire cable flame retardance*

TECHNICAL SPECIFICATIONS

Rated voltage	kV	1
Number and rated area of conductors	mm^2	3 x 70 + 1 x 35
Phase insulation thikness	mm	1.1
Permissible continious current rating (AC of industrial frequency) *		
• *by aerial laying*	A	203
• *by burial*	A	195
Maximum permissible conductor temperature		
• *Continious*	°C	+90
• *in emergency operation*	°C	+130
• *at short circuit*	°C	+250
Operating temperature range	°C	-50 ... +50
Minimum bending radius by laying	mm	255
Rated outer diameter of the cable (for reference) **	mm	34
Cable weight (approximate)	kg/km	1450
Rated factory cable length and gross weight of the delivery on the drums	m, t	# 14: 540 • 1.0 # 16a: 870 • 1.5 # 18: 1000 • 1.9

Notes:

When ordering it is neccesary to agree the factory length of the product with the manufacturer

** Long permissible current loads are calculated for the following conditions: air temperature plus 25 °C, soil temperature plus 15 °C, thermal resistivity of soil 1.2 °K•m/W, laying depth in the soil 0.7 m*

*** The external diameter may differ from the rated up to ± 10 %*

© 2024 PJSC Yuzhcable Works. © 2024 A. Kevorkyan

180123-130700110350

7, Autogennaya Str., Kharkov, 61099, Ukraine. Phone: (+38-057) 728-1244, 728-1241. Fax: (+38-057) 728-1243, (+38-0572) 946-830
E-mail: market@yuzhcable.com.ua

АПвБбШв 3х70+1х35 (ож)-1
ГОСТ 16442-80,ТУ У 31.3-00214534-048:2007

Power cables with aluminium conductors, XLPE-insulated, galvanized steel-tape armoured, with PVC-compound protection hose

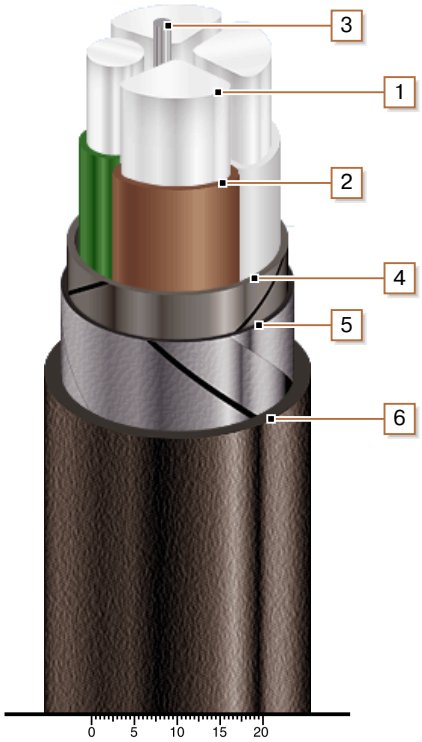

CONSTRUCTION

1. *Aluminium conductor*
2. *XLPE insulation*
3. *PVC compound bundle*
4. *Tape core wrapping*
5. *Double galvanized steel-tape armour*
6. *Pressed PVC compound protection hose*

Note: conductor twisting is not illustrated

© 2024 PJSC Yuzhcable Works. © 2024 A. Kevorkyan