7, Autogennaya Str., Kharkov, 61099, Ukraine. Phone: (+38-057) 728-1244, 728-1241. Fax: (+38-057) 728-1243, (+38-0572) 946-830
E-mail: market@yuzhcable.com.ua

180103-130250100000

АВБбШнг 3х25 (ож)-1
ТУ У 31.3-00214534-018-2003

Power cables with aluminium conductors, with PVC-compound insulation, galvanized steel-tape armoured, with low-flammable PVC-compound protection hose

Cables are used for laying:
- *in bunches*
- *in premises, dry ducts and tunnels, in corrosive environment*
- *in places, where small mechanical impacts on cable are possible, including tensile forces*

Manufacturing of cable with PVC compound belt insulation is possible

Fire safety code in accordance with ДСТУ 4809:2007: ПБ120000000
Products of this mark meet the requirements:
- *single wire cable flame retardance*
- *bunched cable flame retardance category A*

TECHNICAL SPECIFICATIONS

Rated voltage	kV	1
Number and rated area of conductors	mm^2	3 x 25
Phase insulation thikness	mm	1.2
Permissible continious current rating (AC of industrial frequency) *		
• *by aerial laying*	A	87
• *by burial*	A	102
Maximum permissible conductor temperature		
• *Continious*	°C	+70
• *in emergency operation*	°C	+90
• *at short circuit*	°C	+160
Operating temperature range	°C	-50 ... +50
Minimum bending radius by laying	mm	202.5
Rated outer diameter of the cable (for reference) **	mm	27
Cable weight (approximate)	kg/km	900
Rated factory cable length and gross weight of the delivery on the drums	m, t	# 14: 800 • 0.9

Notes:

When ordering it is neccesary to agree the factory length of the product with the manufacturer

** Long permissible current loads are calculated for the following conditions: air temperature plus 25 °C, soil temperature plus 15 °C, thermal resistivity of soil 1.2 °K•m/W, laying depth in the soil 0.7 m*

*** The external diameter may differ from the rated up to ± 10 %*

© 2024 PJSC Yuzhcable Works. © 2024 A. Kevorkyan

7, Autogennaya Str., Kharkov, 61099, Ukraine. Phone: (+38-057) 728-1244, 728-1241. Fax: (+38-057) 728-1243, (+38-0572) 946-830
E-mail: market@yuzhcable.com.ua

180103-130250100000

АВБбШнг 3х25 (ож)-1
ТУ У 31.3-00214534-018-2003

Power cables with aluminium conductors, with PVC-compound insulation, galvanized steel-tape armoured, with low-flammable PVC-compound protection hose

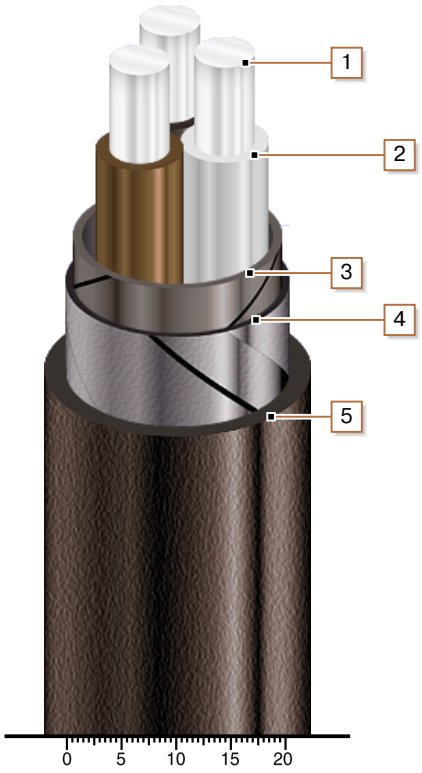

CONSTRUCTION

1. Aluminium conductor
2. PVC compound insulation
3. Tape core wrapping
4. Double galvanized steel-tape armour
5. Pressed off low-flammable PVC compound protection hose

Note: conductor twisting is not illustrated

© 2024 PJSC Yuzhcable Works. © 2024 A. Kevorkyan