154802-061003000050

7, Autogennaya Str., Kharkov, 61099, Ukraine. Phone: (+38-057) 728-1244, 728-1241. Fax: (+38-057) 728-1243, (+38-0572) 946-830
E-mail: market@yuzhcable.com.ua

ЦСБ2л 3х50(ож)-6
ТУ У 27.3-00214534-091:2017

Power cables with copper conductors, with non-draining impregnated paper insulation, lead-sheathed, steel-tape armoured

Cables are used for laying:
- *without level difference limitation*
- *in soil (trenches) with high corrosiveness, as well as with vagabond currents*
- *with a risk of mechanical damage and no tensile forces in operation*

TECHNICAL SPECIFICATIONS

Rated voltage	kV	6
Number and rated area of conductors	mm^2	3 x 50
Insulation thikness between conductors	mm	4
Insulation thikness of conductor-sheath	mm	2.95
Sheath thikness	mm	1.26
Permissible continious current rating *		
• *by aerial laying*	A	200
• *by burial*	A	197
Operating temperature range	°C	-50 … +50
Minimum bending radius by laying	mm	570
Metal shaeth outer diameter (for reference only)	mm	26
Rated outer diameter of the cable (for reference) **	mm	38
Cable weight (approximate)	kg/km	3820
Rated factory cable length and gross weight of the delivery on the drums ***	m, t	# 16a: 700 • 2.9

Notes:

When ordering it is neccesary to agree the factory length of the product with the manufacturer

** Long permissible current loads are calculated for the following conditions: air temperature plus 25 °C, soil temperature plus 15 °C, thermal resistivity of soil 1.2 °K•m/W, laying depth in the soil 0.7 m*

*** The external diameter may differ from the rated up to ± 10 %*

© 2024 PJSC Yuzhcable Works. © 2024 A. Kevorkyan

154802-061003000050

7, Autogennaya Str., Kharkov, 61099, Ukraine. Phone: (+38-057) 728-1244, 728-1241. Fax: (+38-057) 728-1243, (+38-0572) 946-830
E-mail: market@yuzhcable.com.ua

ЦСБ2л 3х50(ож)-6
ТУ У 27.3-00214534-091:2017

Power cables with copper conductors, with non-draining impregnated paper insulation, lead-sheathed, steel-tape armoured

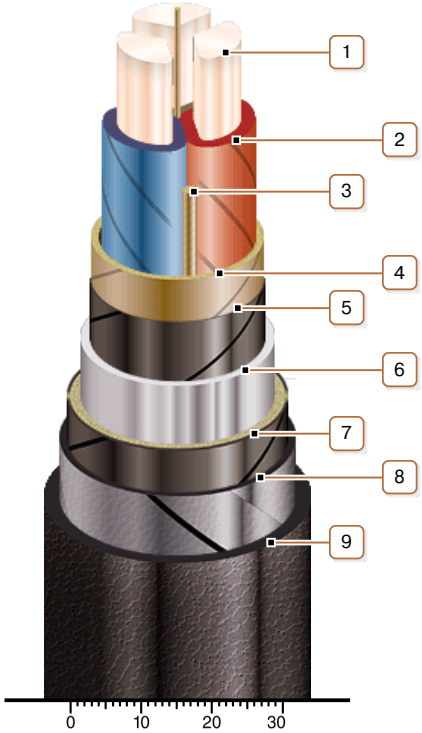

CONSTRUCTION

1. *Copper conductor*
2. *Impregnated paper insulation*
3. *Cable paper bundle*
4. *Belt insulation*
5. *Conducting paper screen*
6. *Lead sheath*
7. *Double-layer plastic-tape bedding*
8. *Double steel-tape armour*
9. *Outer covering*

Note: Conductor twisting is not illustrated

© 2024 PJSC Yuzhcable Works. © 2024 A. Kevorkyan