150601-101003000185

7, Autogennaya Str., Kharkov, 61099, Ukraine. Phone: (+38-057) 728-1244, 728-1241. Fax: (+38-057) 728-1243, (+38-0572) 946-830
E-mail: market@yuzhcable.com.ua

ААБнлГ 3х185(ож)-10
ТУ У 27.3-00214534-091:2017

Power cables with aluminium conductors, with impregnated paper insulation, aluminium-sheathed, steel-tape armoured

Cables are used for laying:
- *in dry premises (tunnels), ducts, cable cellars, mines, collectors, industrial and other premises, including damp, partially flooded premises, environment with medium and high corrosivenes*
- *in fire-risk premises*
- *on technological trestles*
- *on special cable bridges*
- *on bridges*
- *with a risk of mechanical damage and no tensile forces in operation*
- *in bunches*

Fire safety code in accordance with ДСТУ 4809:2007: ПБ120000000
Products of this mark meet the requirements:
- *single wire cable flame retardance*
- *bunched cable flame retardance category A*

TECHNICAL SPECIFICATIONS

Rated voltage	kV	10
Number and rated area of conductors	mm^2	3 x 185
Insulation thikness between conductors	mm	5.5
Insulation thikness of conductor-sheath	mm	4
Sheath thikness	mm	1.75
Permissible continious current rating *		
• *by aerial laying*	A	298
• *by burial*	A	275
Operating temperature range	°C	-50 ... +50
Minimum bending radius by laying	mm	1300
Level difference along the laying rout, not more than	m	15
Metal shaeth outer diameter (for reference only)	mm	44
Rated outer diameter of the cable (for reference) **	mm	52
Cable weight (approximate)	kg/km	4430
Rated factory cable length and gross weight of the delivery on the drums ***	m, t	# 18: 430 • 2.4 # 20: 680 • 3.7

Notes:

When ordering it is neccesary to agree the factory length of the product with the manufacturer

** Long permissible current loads are calculated for the following conditions: air temperature plus 25 °C, soil temperature plus 15 °C, thermal resistivity of soil 1.2 °K•m/W, laying depth in the soil 0.7 m*

*** The external diameter may differ from the rated up to ± 10 %*

© 2024 PJSC Yuzhcable Works. © 2024 A. Kevorkyan

150601-101003000185

7, Autogennaya Str., Kharkov, 61099, Ukraine. Phone: (+38-057) 728-1244, 728-1241. Fax: (+38-057) 728-1243, (+38-0572) 946-830
E-mail: market@yuzhcable.com.ua

ААБнлГ 3х185(ож)-10
ТУ У 27.3-00214534-091:2017

Power cables with aluminium conductors, with impregnated paper insulation, aluminium-sheathed, steel-tape armoured

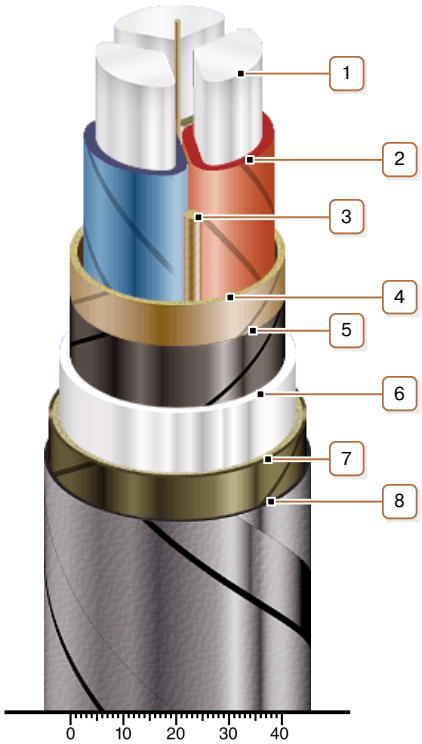

CONSTRUCTION

1. *Aluminium conductor*
2. *Impregnated paper insulation*
3. *Cable paper bundle*
4. *Belt insulation*
5. *Conducting paper screen*
6. *Aluminium sheath*
7. *Plastic-tape and glass-tape bedding*
8. *Double galvanized steel-tape armour*

Note: Conductor twisting is not illustrated

© 2024 PJSC Yuzhcable Works. © 2024 A. Kevorkyan