110405-150000000500

7, Autogennaya Str., Kharkov, 61099, Ukraine. Phone: (+38-057) 728-1244, 728-1241. Fax: (+38-057) 728-1243, (+38-0572) 946-830
E-mail: market@yuzhcable.com.ua

ПвЭгПу-150 1х500
ТУ У 31.3-00214534-060:2011

Power cables with copper conductor, with XLPE, longitudinal screen sealing and strengthened polyethylene outer sheath

For the cable of this mark correspond the foreign-made analogues:
ПвПуг (RU)
Technical cable requirements correspond to IEC 60840

Cables are used for laying:
- *in soil (trenches)*
- *on difficult route sections, according to the unique specification*
- *in the air, including cable structures, if provided the additional fire protection*

It is possible to manufacture cables with extruded semiconductor layer along outer sheath.
Order entry example:
ПвЭгПу-П–150 1х500/95 ТУ У 31.3-00214534-060:2011
An extruded semiconductor layer along outer sheath ensures the correct testing of cable line with sections of underground laying in polymer pipes.

It is possible to manufacture cables with an integrated fiber-optic module.
Order entry example:
ПвЭгПу-150 1х500/95 (ОМ) ТУ У 31.3-00214534-060:2011
In conjunction with the DTS system, the integrated fiber-optic module can act as a distributed cable line temperature sensor.

It is possible to manufacture cable with sealed conductor.
Order entry example:
ПвЭгПу-150 1х500/95 (г) ТУ У 31.3-00214534-060:2011

© 2024 PJSC Yuzhcable Works. © 2024 A. Kevorkyan

110405-150000000500

7, Autogennaya Str., Kharkov, 61099, Ukraine. Phone: (+38-057) 728-1244, 728-1241. Fax: (+38-057) 728-1243, (+38-0572) 946-830
E-mail: market@yuzhcable.com.ua

ПвЭгПу-150 1х500
ТУ У 31.3-00214534-060:2011

Power cables with copper conductor, with XLPE, longitudinal screen sealing and strengthened polyethylene outer sheath

TECHNICAL SPECIFICATIONS

Rated voltage	kV	150
Maximum voltage	kV	170
Conductor rated area	mm^2	500
Minimum screen cross-section	mm^2	95
Partial discharge factor for rated voltage, not more than	pC	6
Permissible short circuit current across the screen of minimum cross-section	kA	7.1
Maximum permissible short-circuit current in core	kA	71.5
Permissible continious current rating by aerial laying *		
• *in trefoil formation with double-side screen earthing*	A	881
• *in trefoil formation with single-side screen earthing or cross screen earthing*	A	941
• *plane with double-side screen earthing*	A	860
• *plane with single-side screen earthing or cross screen earthing*	A	1088
Permissible continious current rating by burial *		
• *in trefoil formation with double-side screen earthing*	A	687
• *in trefoil formation with single-side screen earthing or cross screen earthing*	A	748
• *plane with double-side screen earthing*	A	615
• *plane with single-side screen earthing or cross screen earthing*	A	787
Maximum permissible conductor temperature		
• *Continious*	˚C	+90
• *in emergency operation*	˚C	+130
• *at short circuit*	˚C	+250
Operating temperature range	˚C	-60 … +50
Minimum bending radius by laying	mm	1360
Rated outer diameter of the cable (for reference) **	mm	85
Cable weight (approximate)	kg/km	11070
Rated factory cable length and gross weight of the delivery on the drums	m, t	# 25УД-90: 420 • 6.2 # 26УД-100: 604 • 8.5 # 30УД-130: ***645 • 10.0

Notes:

When ordering it is neccesary to agree the factory length of the product with the manufacturer

** Long permissible current loads are calculated for the following conditions: conductor temperature 90 ˚C, air temperature 30 ˚C, soil temperature 20 ˚C, load factor 1.0, thermal resistivity of soil 1.0 ˚K•m/W, laying depth in the ground 1.5 m, while laying in flat formation the distance between cables in clear is equal to the cable diameter, while laying in trefoil formation cables are laid side by side*

*** The external diameter may differ from the rated up to ± 10 %*

**** Option delivery on not full drum*

© 2024 PJSC Yuzhcable Works. © 2024 A. Kevorkyan

110405-150000000500

7, Autogennaya Str., Kharkov, 61099, Ukraine. Phone: (+38-057) 728-1244, 728-1241. Fax: (+38-057) 728-1243, (+38-0572) 946-830
E-mail: market@yuzhcable.com.ua

ПвЭгПу-150 1х500
ТУ У 31.3-00214534-060:2011

Power cables with copper conductor, with XLPE, longitudinal screen sealing and strengthened polyethylene outer sheath

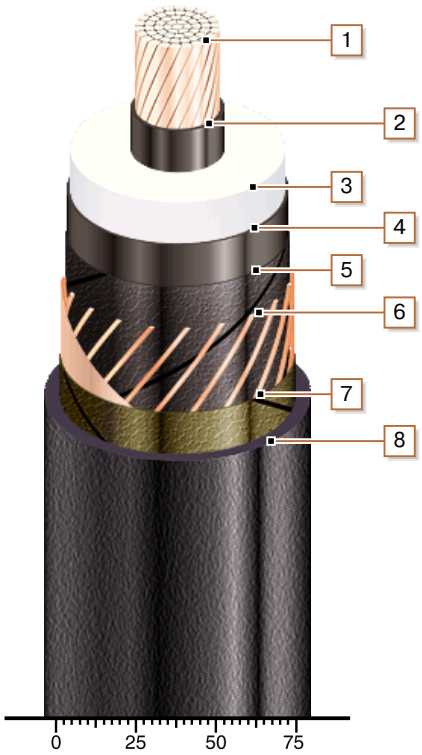

CONSTRUCTION

1. *Copper multiwire compact conductor*
2. *Inner extruded semiconducting layer*
3. *XLPE insulation*
4. *Outer extruded semiconducting layer*
5. *Lapping layer of semiconductive swellable tape*
6. *Copper screen*
7. *Lapping layer of nonwoven cloth tape*
8. *Strengthened polyethylene outer sheath*

© 2024 PJSC Yuzhcable Works. © 2024 A. Kevorkyan