7, Autogennaya Str., Kharkov, 61099, Ukraine. Phone: (+38-057) 728-1244, 728-1241. Fax: (+38-057) 728-1243, (+38-0572) 946-830
E-mail: market@yuzhcable.com.ua

110404-132000001600

# ПвЭгаП-132 1х1600
# ТУ У 31.3-00214534-060:2011

Power cables with copper conductor, with XLPE, longitudinal and transverse screen sealing and polyethylene outer sheath

For the cable of this mark correspond the foreign-made analogues:
N2XS(FL)2Y (DE) • 2XS(FL)2Y (DE) • HXCHBMK (FI) • Cu/XLPE/CWS/LW/MDPE (GB) • XRUHKXS (PL) • ПвП2г (RU)
Technical cable requirements correspond to IEC 60840

Cables are used for laying:
- *in soil (trenches)*
- *in damp, partially flooded premises*
- *in ground with high humidity*
- *in non-navigable waters*
- *in the air, including cable structures, if provided the additional fire protection*

It is possible to manufacture cables with extruded semiconductor layer along outer sheath.
Order entry example:
ПвЭгаП-П–132 1х1600/95 ТУ У 31.3-00214534-060:2011
An extruded semiconductor layer along outer sheath ensures the correct testing of cable line with sections of underground laying in polymer pipes.

It is possible to manufacture cables with an integrated fiber-optic module.
Order entry example:
ПвЭгаП-132 1х1600/95 (ОМ) ТУ У 31.3-00214534-060:2011
In conjunction with the DTS system, the integrated fiber-optic module can act as a distributed cable line temperature sensor.

It is possible to manufacture cable with sealed conductor.
Order entry example:
ПвЭгаП-132 1х1600/95 (г) ТУ У 31.3-00214534-060:2011

© 2024 PJSC Yuzhcable Works. © 2024 A. Kevorkyan

7, Autogennaya Str., Kharkov, 61099, Ukraine. Phone: (+38-057) 728-1244, 728-1241. Fax: (+38-057) 728-1243, (+38-0572) 946-830
E-mail: market@yuzhcable.com.ua

110404-132000001600

# ПвЭгаП-132 1х1600
# ТУ У 31.3-00214534-060:2011

Power cables with copper conductor, with XLPE, longitudinal and transverse screen sealing and polyethylene outer sheath

## TECHNICAL SPECIFICATIONS

| | | |
|---|---|---|
| Rated voltage | kV | 132 |
| Maximum voltage | kV | 145 |
| Conductor rated area | $mm^2$ | 1600 |
| Minimum screen cross-section | $mm^2$ | 95 |
| Partial discharge factor for rated voltage, not more than | pC | 6 |
| Permissible short circuit current across the screen of minimum cross-section | kA | 14.2 |
| Maximum permissible short-circuit current in core | kA | 229 |
| Permissible continious current rating by aerial laying * | | |
| • *in trefoil formation with double-side screen earthing* | A | 1602 |
| • *in trefoil formation with single-side screen earthing or cross screen earthing* | A | 1982 |
| • *plane with double-side screen earthing* | A | 1379 |
| • *plane with single-side screen earthing or cross screen earthing* | A | 2364 |
| Permissible continious current rating by burial * | | |
| • *in trefoil formation with double-side screen earthing* | A | 1092 |
| • *in trefoil formation with single-side screen earthing or cross screen earthing* | A | 1424 |
| • *plane with double-side screen earthing* | A | 865 |
| • *plane with single-side screen earthing or cross screen earthing* | A | 1524 |
| Maximum permissible conductor temperature | | |
| • *Continious* | ˚C | +90 |
| • *in emergency operation* | ˚C | +130 |
| • *at short circuit* | ˚C | +250 |
| Operating temperature range | ˚C | -60 ... +50 |
| Minimum bending radius by laying | mm | 1744 |
| Rated outer diameter of the cable (for reference) ** | mm | 109 |
| Cable weight (approximate) | kg/km | 23450 |
| Rated factory cable length and gross weight of the delivery on the drums | m, t | # 30УД-130: ***304 • 10.0 |

*Notes:*

*When ordering it is neccesary to agree the factory length of the product with the manufacturer*

** Long permissible current loads are calculated for the following conditions: conductor temperature 90 ˚C, air temperature 30 ˚C, soil temperature 20 ˚C, load factor 1.0, thermal resistivity of soil 1.0 ˚K•m/W, laying depth in the ground 1.5 m, while laying in flat formation the distance between cables in clear is equal to the cable diameter, while laying in trefoil formation cables are laid side by side*

*** The external diameter may differ from the rated up to ± 10 %*

**** Option delivery on not full drum*

© 2024 PJSC Yuzhcable Works. © 2024 A. Kevorkyan

7, Autogennaya Str., Kharkov, 61099, Ukraine. Phone: (+38-057) 728-1244, 728-1241. Fax: (+38-057) 728-1243, (+38-0572) 946-830
E-mail: market@yuzhcable.com.ua

110404-132000001600

# ПвЭгаП-132 1х1600
# ТУ У 31.3-00214534-060:2011

Power cables with copper conductor, with XLPE, longitudinal and transverse screen sealing and polyethylene outer sheath

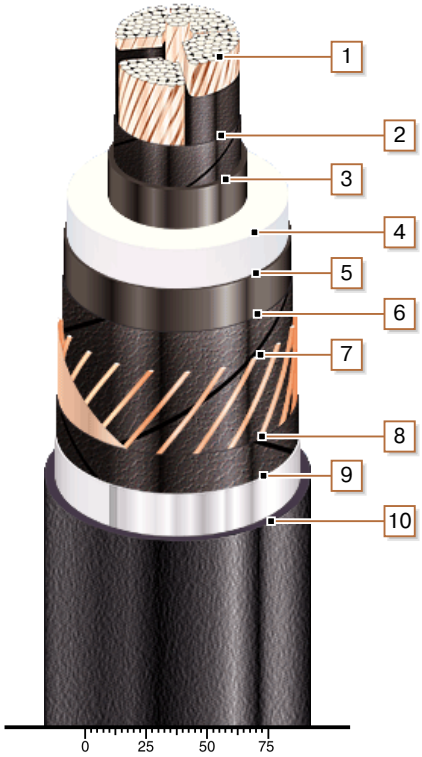


## CONSTRUCTION

1. *Copper segmentary multiwire compact conductor*
2. *Lapping layer of semiconductive swellable tape*
3. *Inner extruded semiconducting layer*
4. *XLPE insulation*
5. *Outer extruded semiconducting layer*
6. *Lapping layer of semiconductive swellable tape*
7. *Copper screen*
8. *Lapping layer of semiconductive swellable tape*
9. *Alumopolymer tape*
10. *Outer sheath of polyethylene or polyethylene copolymer*

*Note: conductor segment twisting is not illustrated*

© 2024 PJSC Yuzhcable Works. © 2024 A. Kevorkyan