110403-045000001000

7, Autogennaya Str., Kharkov, 61099, Ukraine. Phone: (+38-057) 728-1244, 728-1241. Fax: (+38-057) 728-1243, (+38-0572) 946-830
E-mail: market@yuzhcable.com.ua

ПвЭгП-45 1x1000
ТУ У 31.3-00214534-060:2011

Power cables with copper conductor, with XLPE, longitudinal screen sealing and polyethylene outer sheath

For the cable of this mark correspond the foreign-made analogues:
N2XS2Y (DE) • N2XS(F)2Y (DE) • 2XS2Y (DE) • 2XS(F)2Y (DE) • Cu/XLPE/CWS/MDPE (GB) • XUHKXS (PL) • XHKXS (PL) • ПвПг (RU) • ПвП (RU)
Technical cable requirements correspond to IEC 60840

Cables are used for laying:
- *in soil (trenches)*
- *in the air, including cable structures, if provided the additional fire protection*

It is possible to manufacture cable with a segmented conductor

It is possible to manufacture cables with extruded semiconductor layer along outer sheath.
Order entry example:
ПвЭгП-П–45 1x1000/95 ТУ У 31.3-00214534-060:2011
An extruded semiconductor layer along outer sheath ensures the correct testing of cable line with sections of underground laying in polymer pipes.

It is possible to manufacture cables with an integrated fiber-optic module.
Order entry example:
ПвЭгП-45 1x1000/95 (ОМ) ТУ У 31.3-00214534-060:2011
In conjunction with the DTS system, the integrated fiber-optic module can act as a distributed cable line temperature sensor.

It is possible to manufacture cable with sealed conductor.
Order entry example:
ПвЭгП-45 1x1000/95 (г) ТУ У 31.3-00214534-060:2011

© 2024 PJSC Yuzhcable Works. © 2024 A. Kevorkyan

110403-045000001000

7, Autogennaya Str., Kharkov, 61099, Ukraine. Phone: (+38-057) 728-1244, 728-1241. Fax: (+38-057) 728-1243, (+38-0572) 946-830
E-mail: market@yuzhcable.com.ua

ПвЭгП-45 1x1000
ТУ У 31.3-00214534-060:2011

Power cables with copper conductor, with XLPE, longitudinal screen sealing and polyethylene outer sheath

TECHNICAL SPECIFICATIONS

Rated voltage	kV	45
Maximum voltage	kV	52
Conductor rated area	mm^2	1000
Minimum screen cross-section	mm^2	35
Partial discharge factor for rated voltage, not more than	pC	6
Permissible short circuit current across the screen of minimum cross-section	kA	7.1
Maximum permissible short-circuit current in core	kA	143
Permissible continious current rating by aerial laying *		
• *in trefoil formation with double-side screen earthing*	A	1094
• *in trefoil formation with single-side screen earthing or cross screen earthing*	A	1254
• *plane with double-side screen earthing*	A	935
• *plane with single-side screen earthing or cross screen earthing*	A	1503
Permissible continious current rating by burial *		
• *in trefoil formation with double-side screen earthing*	A	852
• *in trefoil formation with single-side screen earthing or cross screen earthing*	A	994
• *plane with double-side screen earthing*	A	712
• *plane with single-side screen earthing or cross screen earthing*	A	1074
Maximum permissible conductor temperature		
• *Continious*	˚C	+90
• *in emergency operation*	˚C	+130
• *at short circuit*	˚C	+250
Operating temperature range	˚C	-60 … +50
Minimum bending radius by laying	mm	1152
Rated outer diameter of the cable (for reference) **	mm	72
Cable weight (approximate)	kg/km	14780
Rated factory cable length and gross weight of the delivery on the drums ***	m, t	# 22УД-60: 339 • 5.9 # 25УД-90: **** 570 • 10.0

Notes:

When ordering it is neccesary to agree the factory length of the product with the manufacturer

** Long permissible current loads are calculated for the following conditions: conductor temperature 90 ˚C, air temperature 30 ˚C, soil temperature 20 ˚C, load factor 1.0, thermal resistivity of soil 1.0 ˚K•m/W, laying depth in the ground 1.5 m, while laying in flat formation the distance between cables in clear is equal to the cable diameter, while laying in trefoil formation cables are laid side by side*

*** The external diameter may differ from the rated up to ± 10 %*

**** Отклонение фактической массы брутто от указанного значения может составлять ± 7 %*

***** Option delivery on not full drum*

© 2024 PJSC Yuzhcable Works. © 2024 A. Kevorkyan

110403-045000001000

7, Autogennaya Str., Kharkov, 61099, Ukraine. Phone: (+38-057) 728-1244, 728-1241. Fax: (+38-057) 728-1243, (+38-0572) 946-830
E-mail: market@yuzhcable.com.ua

ПвЭгП-45 1х1000
ТУ У 31.3-00214534-060:2011

Power cables with copper conductor, with XLPE, longitudinal screen sealing and polyethylene outer sheath

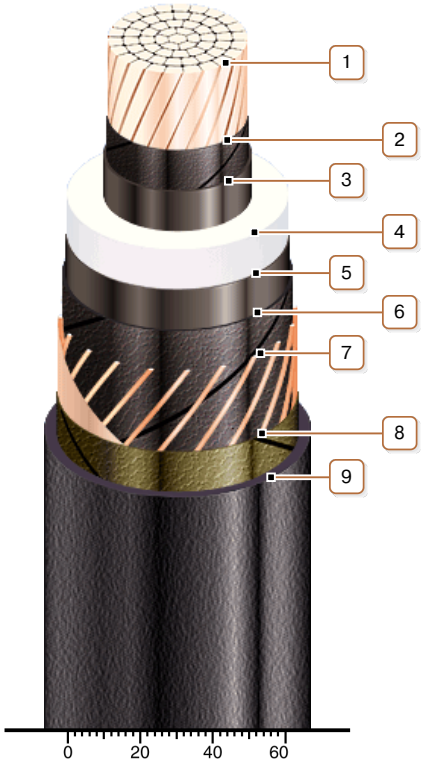

CONSTRUCTION

1. Copper multiwire compact conductor

Notes:
- *It is possible to manufacture cable with a segmented conductor*
- *It is possible to manufacture cable with sealed conductor.*

2. Lapping layer of semiconductive swellable tape

3. Inner extruded semiconducting layer

4. XLPE insulation

5. Outer extruded semiconducting layer

6. Lapping layer of semiconductive swellable tape

7. Copper screen

Note: It is possible to manufacture a cable with a fiber optic module built into the screen, including as a DTS system sensor

8. Lapping layer of nonwoven cloth tape

9. Outer sheath of polyethylene or polyethylene copolymer

Note: It is possible to manufacture cable with extruded semiconductor layer along outer sheath

© 2024 PJSC Yuzhcable Works. © 2024 A. Kevorkyan