7, Autogennaya Str., Kharkov, 61099, Ukraine. Phone: (+38-057) 728-1244, 728-1241. Fax: (+38-057) 728-1243, (+38-0572) 946-830
E-mail: market@yuzhcable.com.ua

110401-060000000240

ПвЭВнг-60 1х240
ТУ У 31.3-00214534-060:2011

Power cables with copper conductor, flame-retardant, with XLPE and PVC compound outer sheath

For the cable of this mark correspond the foreign-made analogues:
ПвВнг(В) (RU) • ПвВнг(А) (RU)
Technical cable requirements correspond to IEC 60840

Cables are used for laying:
- *in premises, tunnels, ducts, mines, dry soil and outdoor under shelter*
- *in bunches*

It is possible to manufacture cables with an integrated fiber-optic module.
Order entry example:
ПвЭВнг-60 1х240/95 (ОМ) ТУ У 31.3-00214534-060:2011
In conjunction with the DTS system, the integrated fiber-optic module can act as a distributed cable line temperature sensor.

It is possible to manufacture cable with sealed conductor.
Order entry example:
ПвЭВнг-60 1х240/95 (г) ТУ У 31.3-00214534-060:2011

Fire safety code in accordance with ДСТУ 4809:2007: ПБ130000000
Products of this mark meet the requirements:
- *single wire cable flame retardance*
- *bunched cable flame retardance category B*

© 2024 PJSC Yuzhcable Works. © 2024 A. Kevorkyan

7, Autogennaya Str., Kharkov, 61099, Ukraine. Phone: (+38-057) 728-1244, 728-1241. Fax: (+38-057) 728-1243, (+38-0572) 946-830
E-mail: market@yuzhcable.com.ua

110401-060000000240

ПвЭВнг-60 1х240
ТУ У 31.3-00214534-060:2011

Power cables with copper conductor, flame-retardant, with XLPE and PVC compound outer sheath

TECHNICAL SPECIFICATIONS

Rated voltage	kV	60
Maximum voltage	kV	72.5
Conductor rated area	mm^2	240
Minimum screen cross-section	mm^2	95
Partial discharge factor for rated voltage, not more than	pC	6
Permissible short circuit current across the screen of minimum cross-section	kA	5.1
Maximum permissible short-circuit current in core	kA	34.3
Permissible continious current rating by aerial laying *		
• *in trefoil formation with double-side screen earthing*	A	587
• *in trefoil formation with single-side screen earthing or cross screen earthing*	A	613
• *plane with double-side screen earthing*	A	621
• *plane with single-side screen earthing or cross screen earthing*	A	727
Permissible continious current rating by burial *		
• *in trefoil formation with double-side screen earthing*	A	488
• *in trefoil formation with single-side screen earthing or cross screen earthing*	A	513
• *plane with double-side screen earthing*	A	462
• *plane with single-side screen earthing or cross screen earthing*	A	536
Maximum permissible conductor temperature		
• *Continious*	° C	+90
• *in emergency operation*	° C	+130
• *at short circuit*	° C	+250
Operating temperature range (in climate version NF)	° C	-50 ... +50
Operating temperature range (in climate version T)	° C	-25 ... +65
Minimum bending radius by laying	mm	848
Rated outer diameter of the cable (for reference) **	mm	53
Cable weight (approximate)	kg/km	5700
Rated factory cable length and gross weight of the delivery on the drums	m, t	# 22УД-60: 635 • 4.5 # 25УД-90: 1068 • 7.7

Notes:

When ordering it is neccesary to agree the factory length of the product with the manufacturer

** Long permissible current loads are calculated for the following conditions: conductor temperature 90 °C, air temperature 30 °C, soil temperature 20 °C, load factor 1.0, thermal resistivity of soil 1.0 °K•m/W, laying depth in the ground 1.5 m, while laying in flat formation the distance between cables in clear is equal to the cable diameter, while laying in trefoil formation cables are laid side by side*

*** The external diameter may differ from the rated up to ± 10 %*

© 2024 PJSC Yuzhcable Works. © 2024 A. Kevorkyan

7, Autogennaya Str., Kharkov, 61099, Ukraine. Phone: (+38-057) 728-1244, 728-1241. Fax: (+38-057) 728-1243, (+38-0572) 946-830
E-mail: market@yuzhcable.com.ua

110401-060000000240

ПвЭВнг-60 1х240
ТУ У 31.3-00214534-060:2011

Power cables with copper conductor, flame-retardant, with XLPE and PVC compound outer sheath

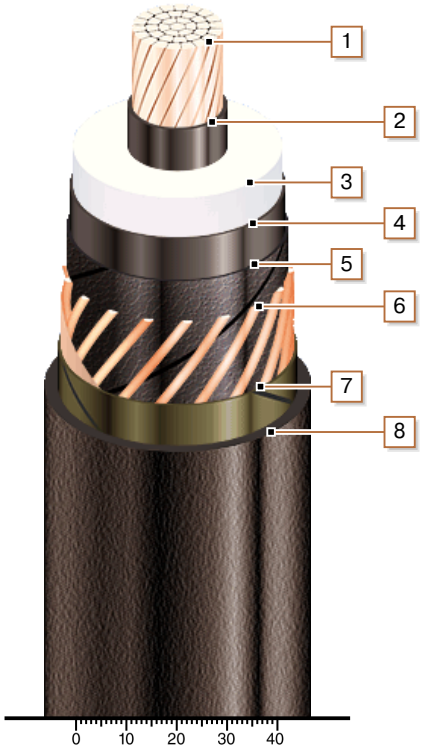

CONSTRUCTION

1. *Copper multiwire compact conductor*
2. *Inner extruded semiconducting layer*
3. *XLPE insulation*
4. *Outer extruded semiconducting layer*
5. *Lapping layer of semiconductive swellable tape*
6. *Copper screen*
7. *Lapping layer of glass tape*
8. *Low flammable PVC compound outer sheath*

© 2024 PJSC Yuzhcable Works. © 2024 A. Kevorkyan