110402-132000000240

7, Autogennaya Str., Kharkov, 61099, Ukraine. Phone: (+38-057) 728-1244, 728-1241. Fax: (+38-057) 728-1243, (+38-0572) 946-830
E-mail: market@yuzhcable.com.ua

ПвЕВнгд-132 1х240
ТУ У 31.3-00214534-060:2011

Power cables with copper conductor, flame-retardant, with XLPE and PVC compound outer sheath and with low smoke and gas emission

For the cable of this mark correspond the foreign-made analogues:
ПвВнг(В)-LS (RU) • ПвВнг(А)-LS (RU)
Technical cable requirements correspond to IEC 60840

Cables are used for laying:
- *in premises, tunnels, ducts, mines, dry soil and outdoor under shelter*
- *in bunches*
- *at sites, where low smoke and gas emission are required (NPP, subway, large industrial facilities, high-rise buildings, etc.)*

It is possible to manufacture cables with an integrated fiber-optic module.
Order entry example:
ПвЕВнгд-132 1х240/95 (ОМ) ТУ У 31.3-00214534-060:2011
In conjunction with the DTS system, the integrated fiber-optic module can act as a distributed cable line temperature sensor.

It is possible to manufacture cable with sealed conductor.
Order entry example:
ПвЕВнгд-132 1х240/95 (г) ТУ У 31.3-00214534-060:2011

Fire safety code in accordance with ДСТУ 4809:2007: ПБ132121000
Products of this mark meet the requirements:
- *single wire cable flame retardance*
- *bunched cable flame retardance category B*
- *toxicity class Tk2 of the combustion products of nonmetallic elements (toxicity index from 40 up to 120 g/m^3)*
- *class ДТк1 on smoke-forming ability by smouldering of non-metallic elements (coefficient of smoke formation from 50 to 500 m^2/kg)*
- *class ДПк2 on smoke-forming ability by combustion (minimum luminous flux more than 60 %)*
- *corrosive class Кк1 of combustion products of non-metallic elements (the number of halogen hydrides less than 150 mg/g, pH less than 4.3, specific conductivity more than 10 μS/mm)*

© 2024 PJSC Yuzhcable Works. © 2024 A. Kevorkyan

110402-132000000240

7, Autogennaya Str., Kharkov, 61099, Ukraine. Phone: (+38-057) 728-1244, 728-1241. Fax: (+38-057) 728-1243, (+38-0572) 946-830
E-mail: market@yuzhcable.com.ua

ПвЕВнгд-132 1х240
ТУ У 31.3-00214534-060:2011

Power cables with copper conductor, flame-retardant, with XLPE and PVC compound outer sheath and with low smoke and gas emission

TECHNICAL SPECIFICATIONS

Rated voltage	kV	132
Maximum voltage	kV	145
Conductor rated area	mm^2	240
Minimum screen cross-section	mm^2	35
Partial discharge factor for rated voltage, not more than	pC	6
Permissible short circuit current across the screen of minimum cross-section	kA	7.1
Maximum permissible short-circuit current in core	kA	34.3
Permissible continious current rating by aerial laying *		
• *in trefoil formation with double-side screen earthing*	A	619
• *in trefoil formation with single-side screen earthing or cross screen earthing*	A	639
• *plane with double-side screen earthing*	A	658
• *plane with single-side screen earthing or cross screen earthing*	A	737
Permissible continious current rating by burial *		
• *in trefoil formation with double-side screen earthing*	A	498
• *in trefoil formation with single-side screen earthing or cross screen earthing*	A	520
• *plane with double-side screen earthing*	A	475
• *plane with single-side screen earthing or cross screen earthing*	A	544
Maximum permissible conductor temperature		
• *Continious*	˚C	+90
• *in emergency operation*	˚C	+130
• *at short circuit*	˚C	+250
Operating temperature range (in climate version NF)	˚C	-50 … +50
Operating temperature range (in climate version T)	˚C	-25 … +65
Minimum bending radius by laying	mm	1184
Rated outer diameter of the cable (for reference) **	mm	74
Cable weight (approximate)	kg/km	7550
Rated factory cable length and gross weight of the delivery on the drums ***	m, t	# 22УД-60: 319 • 3.3 # 25УД-90: 583 • 6.0 # 26УД-100: 799 • 7.9

Notes:

When ordering it is neccesary to agree the factory length of the product with the manufacturer

** Long permissible current loads are calculated for the following conditions: conductor temperature 90 ˚C, air temperature 30 ˚C, soil temperature 20 ˚C, load factor 1.0, thermal resistivity of soil 1.0 ˚K•m/W, laying depth in the ground 1.5 m, while laying in flat formation the distance between cables in clear is equal to the cable diameter, while laying in trefoil formation cables are laid side by side*

*** The external diameter may differ from the rated up to ± 10 %*

**** Отклонение фактической массы брутто от указанного значения может составлять ± 7 %*

© 2024 PJSC Yuzhcable Works. © 2024 A. Kevorkyan

110402-132000000240

7, Autogennaya Str., Kharkov, 61099, Ukraine. Phone: (+38-057) 728-1244, 728-1241. Fax: (+38-057) 728-1243, (+38-0572) 946-830
E-mail: market@yuzhcable.com.ua

ПвЕВнгд-132 1х240
ТУ У 31.3-00214534-060:2011

Power cables with copper conductor, flame-retardant, with XLPE and PVC compound outer sheath and with low smoke and gas emission

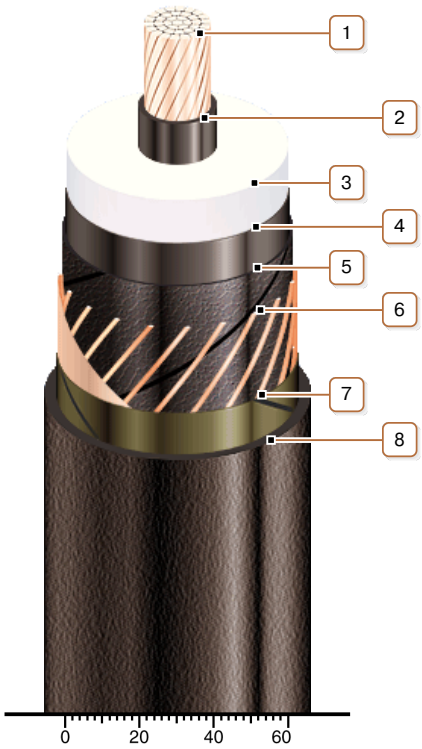

CONSTRUCTION

1. Copper multiwire compact conductor
Note: It is possible to manufacture cable with sealed conductor.

2. Inner extruded semiconducting layer

3. XLPE insulation

4. Outer extruded semiconducting layer

5. Lapping layer of semiconductive swellable tape

6. Copper screen
Note: It is possible to manufacture a cable with a fiber optic module built into the screen, including as a DTS system sensor

7. Lapping layer of glass tape

8. Low fire-risk PVC compound outer sheath

© 2024 PJSC Yuzhcable Works. © 2024 A. Kevorkyan